Assembly Instructions

TC-006A

Adexa Direct Limited,
Unit 1 Swift Point, Cosford
Lane Swift Valley Ind Est
Rugby CV21 1QN

https://adexa.co.uk

E-mail: service@adexa.co.uk
Tel: 01483 931040

Bill of Material

No.	Parts	Dimension in mm （LxWxD）	Quantity
1	Upper Clapboard	1000x476x30.5	1
2	Lower Clapboard	1000x476x61	1
3	Leg	775x40x40	4
4	Leg Connection Frame	775x40x40	2
5	Wooden Worktop	1200x600x30	1
6	Height Adjustable Leveler	φ43	4
7	Mounting Angle	30x30x1.2	2

Explosive Drawing

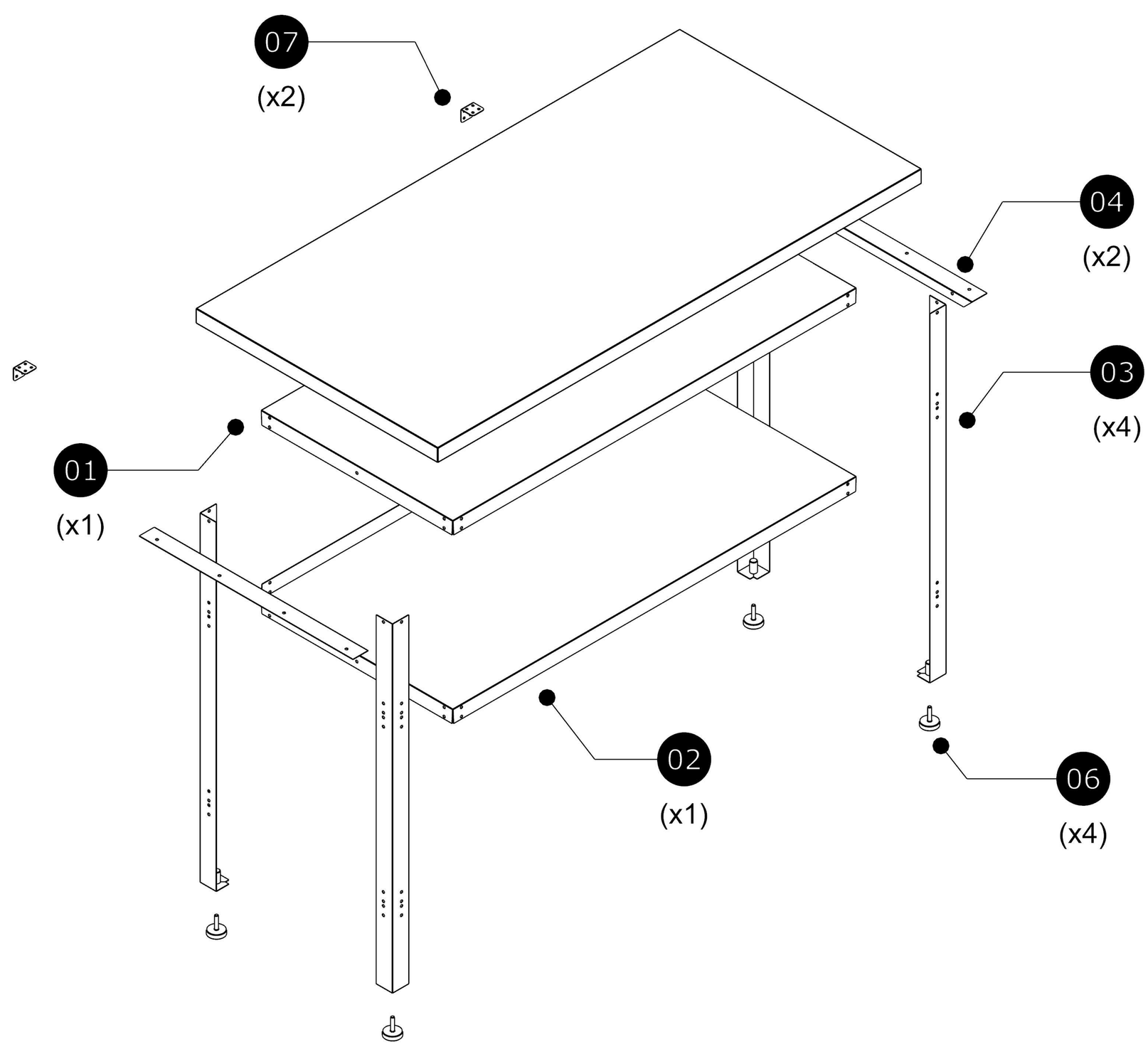

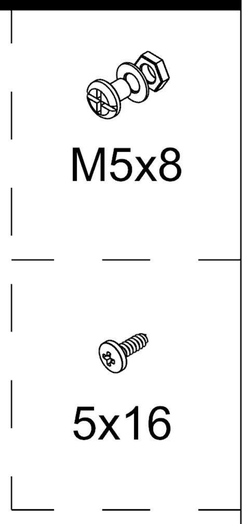

Tool Cabinet Detail

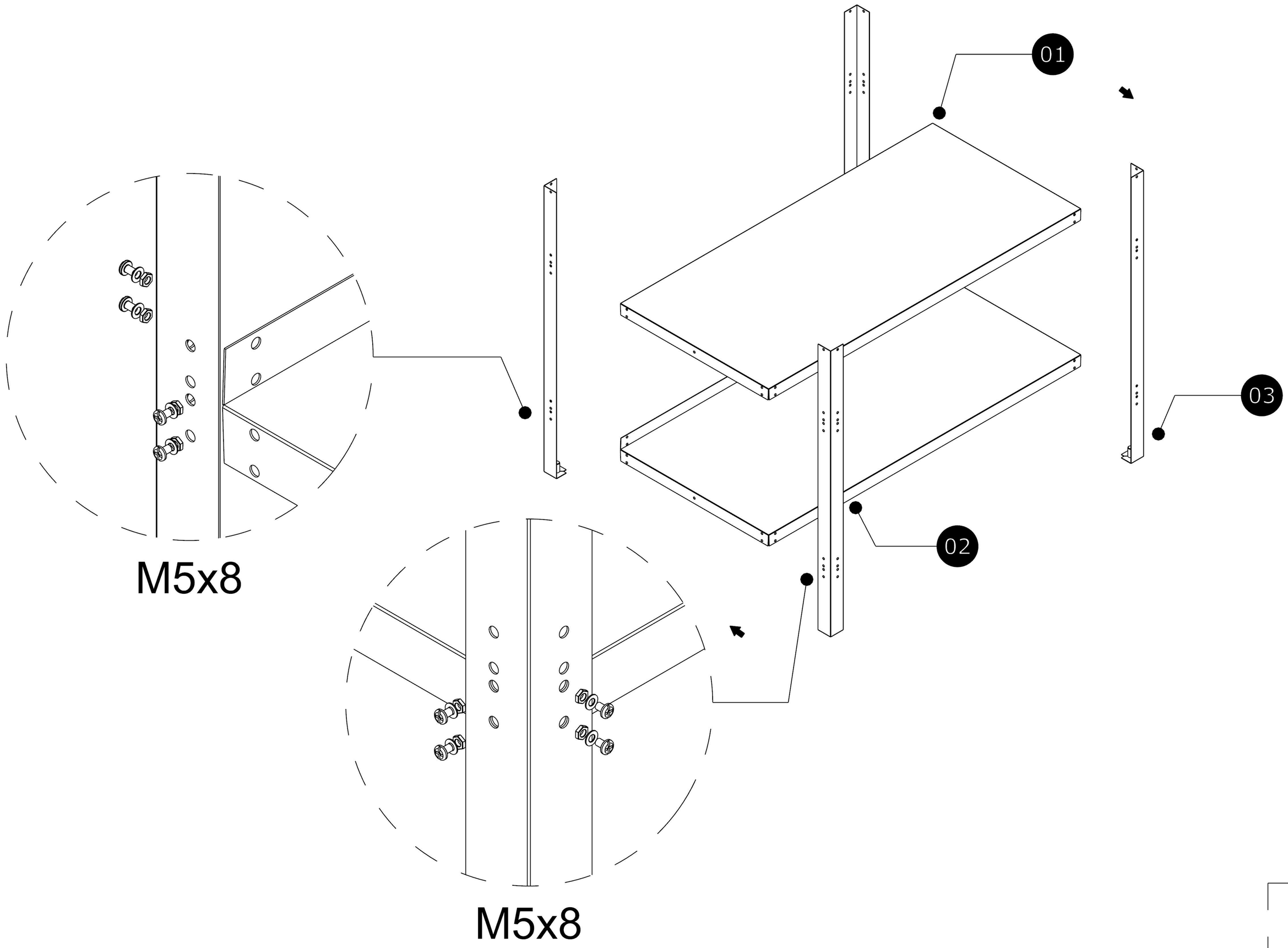

01

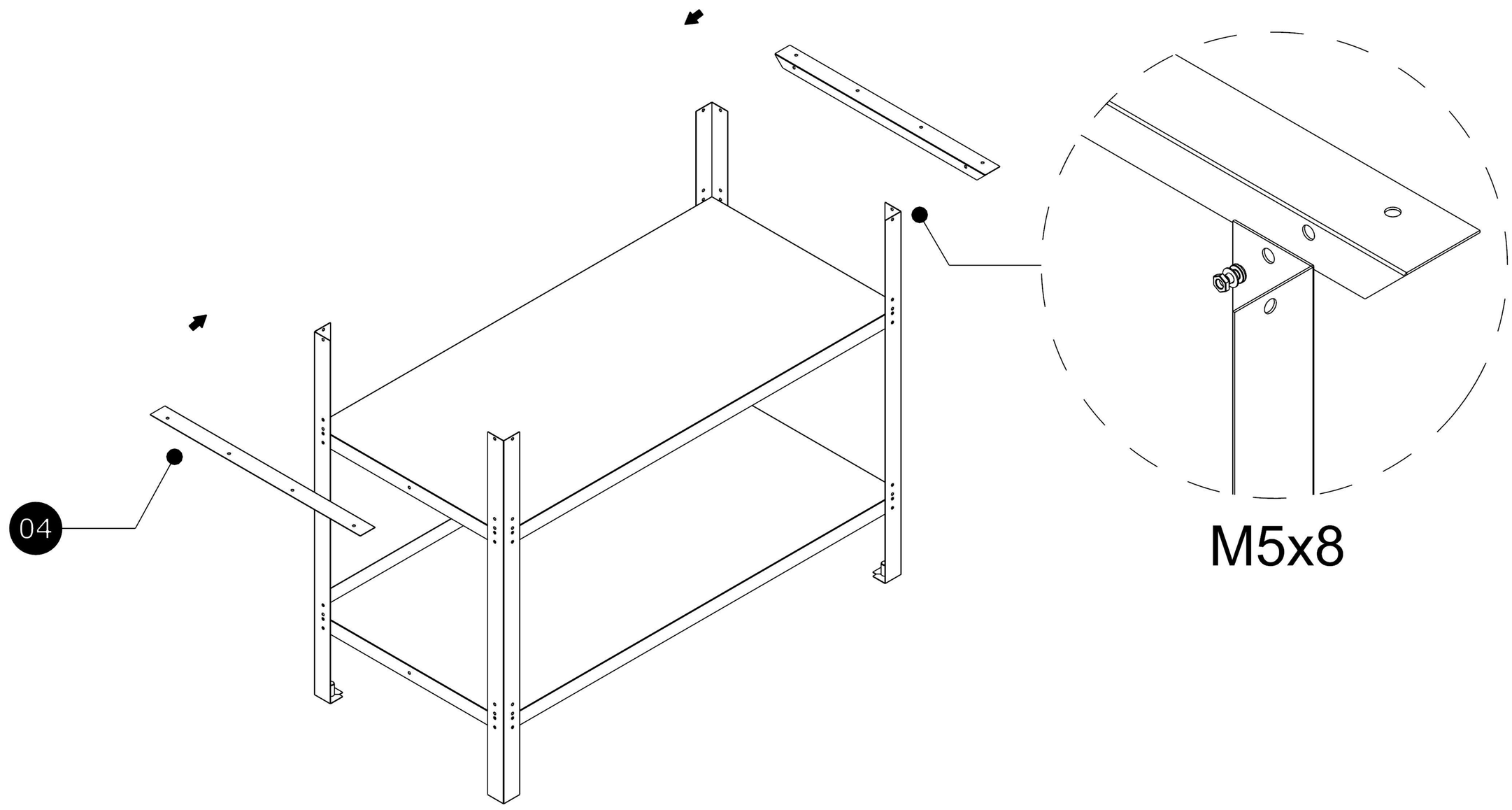

02

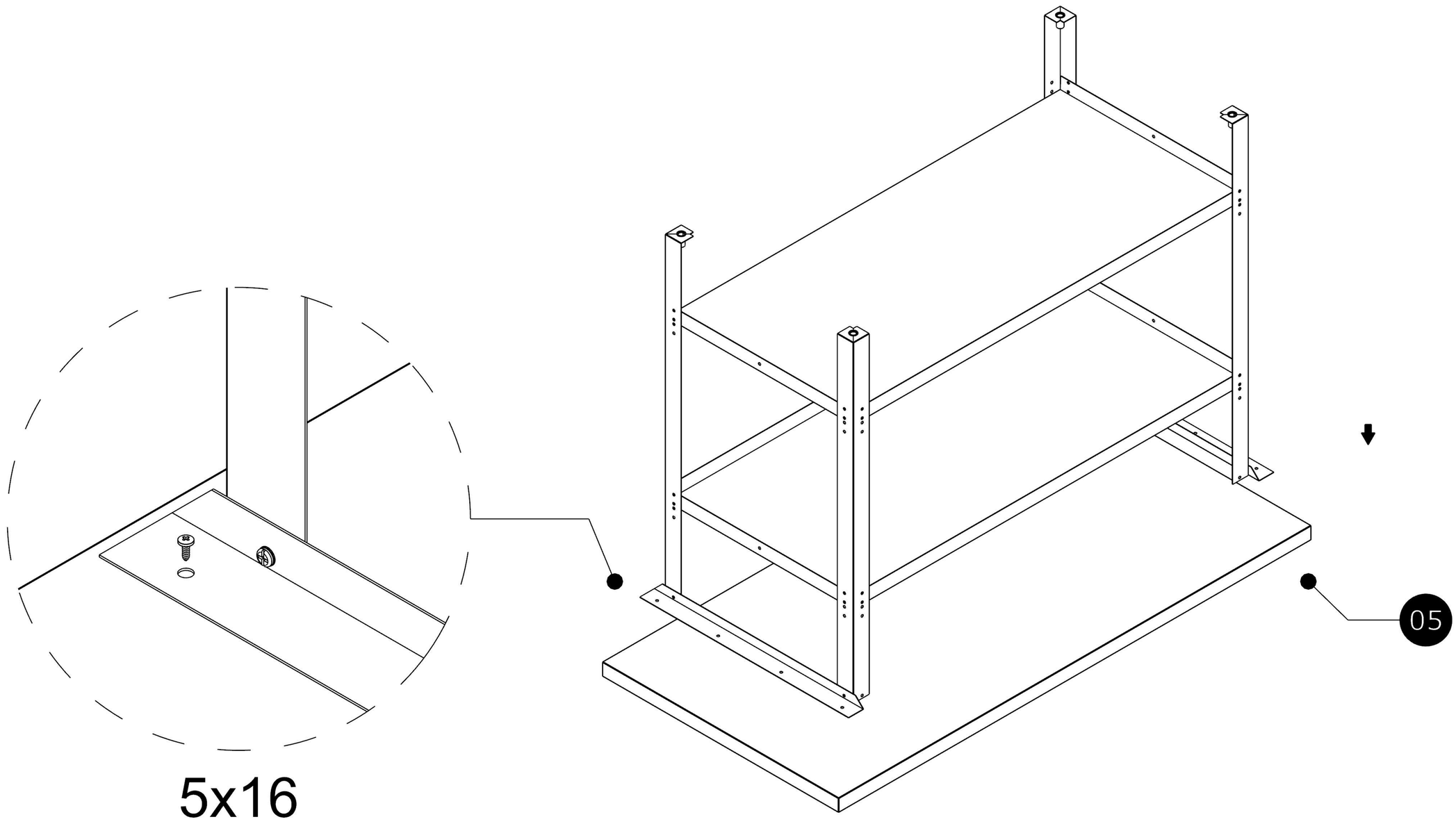
05
5x16

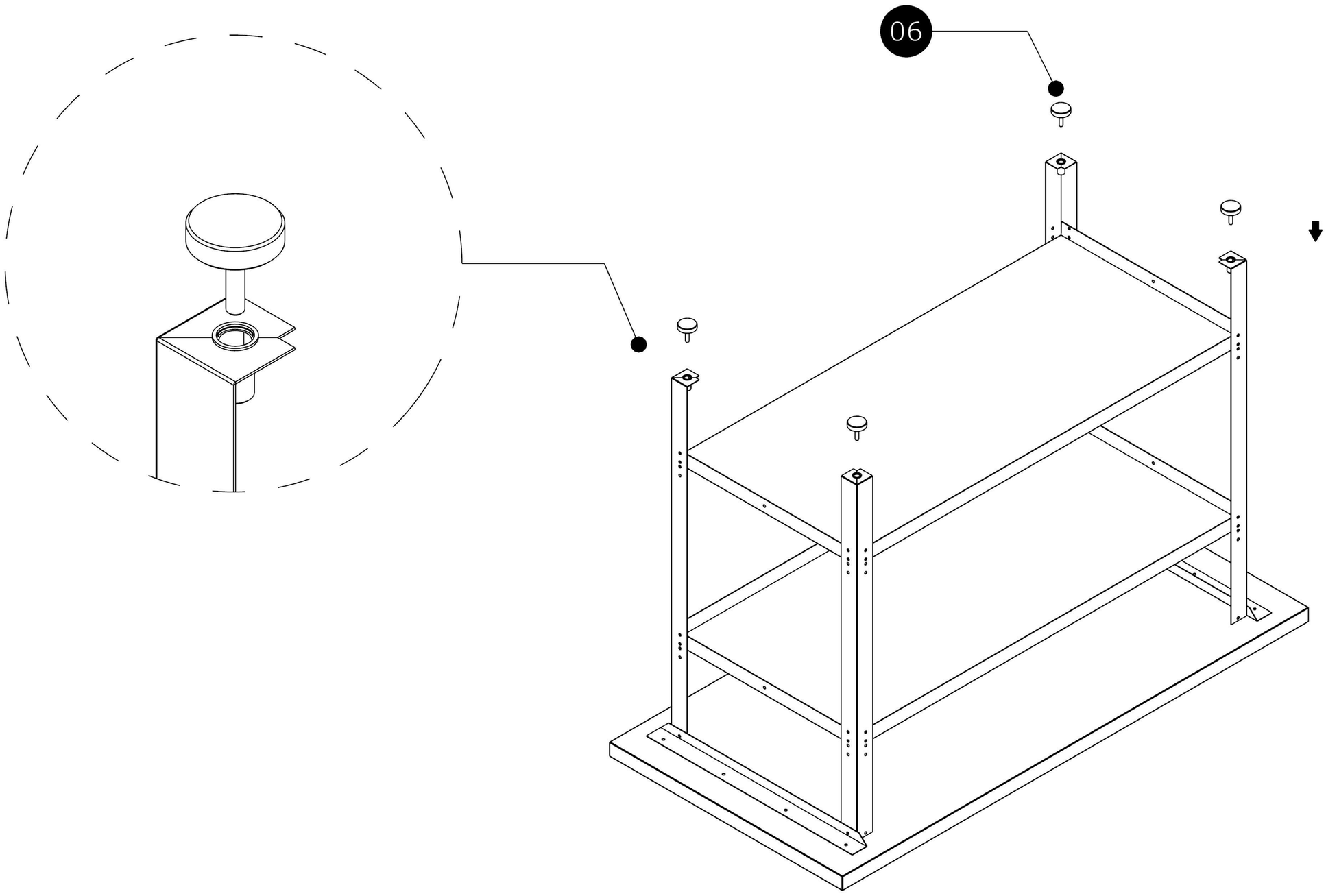
06

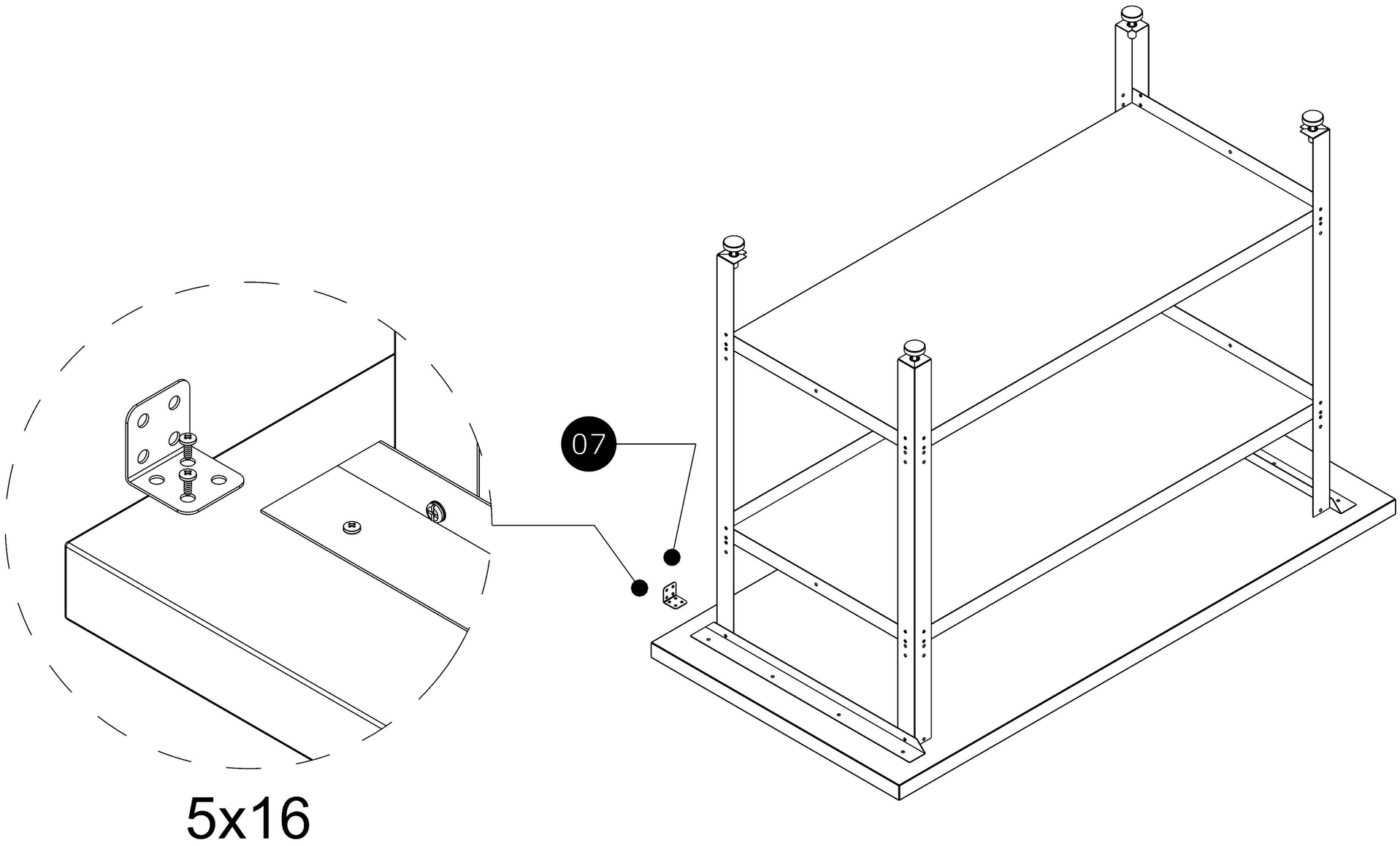
07
5x16

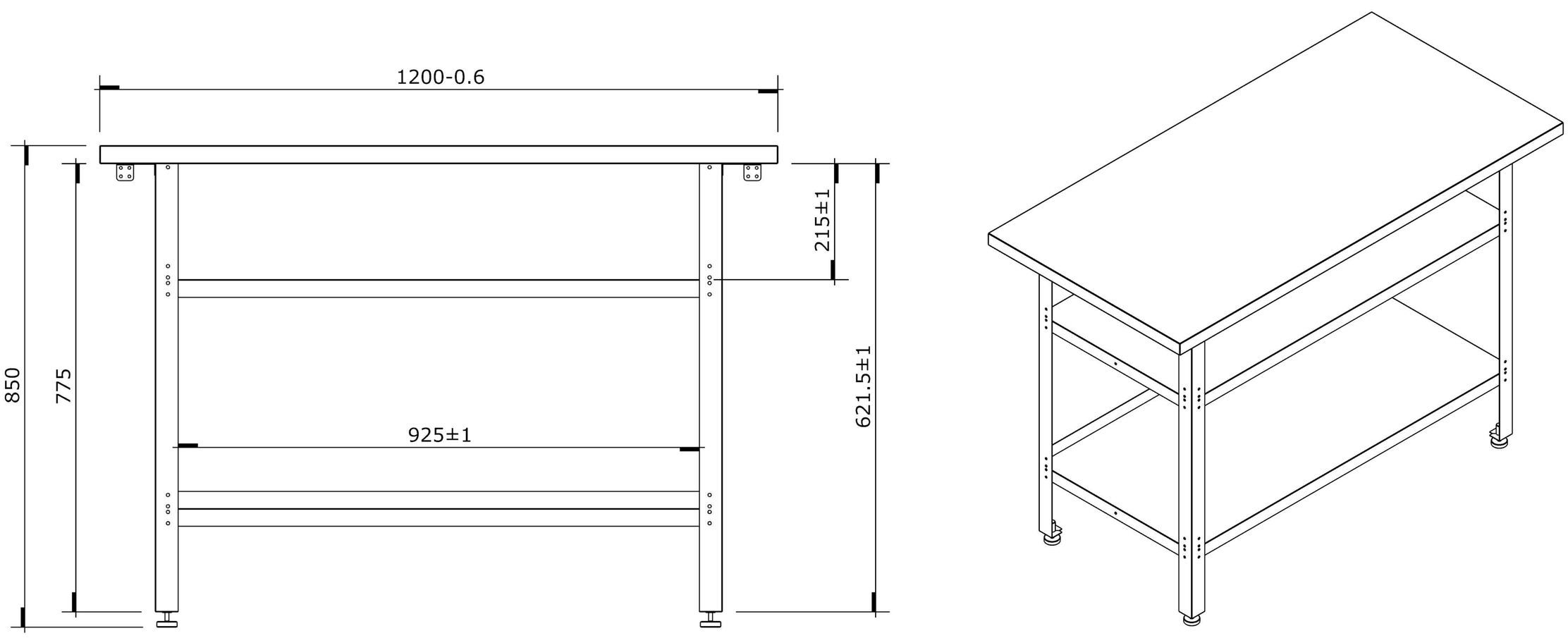
1200-0.6
850
775
215±1
621.5±1
925±1